Bobcat

One Tough Animal

POWERED PALLET TRUCKS

Warehouse equipment, 2.0 to 2.5-ton capacity

EMEA

SIMPLICITY AND STRENGTH: THE BPR20/25N-7 PALLET TRUCKS

The BPR20/25N-7 Ride-on Pallet Trucks, with a 2.0 to 2.5-ton capacity, offer unbeatable value without compromising on performance. Their compact size — 1 790 mm overall length, 640 mm fork-face length, and a tight 1 585 mm turning radius — makes them incredibly maneuverable. And with high-quality components and the option for lithium-ion batteries, these trucks are built to be your reliable warehouse partner for the long haul, giving you that competitive edge in every task.

At Bobcat, we understand the importance of having the right products and services. For more information, contact your local dealer or visit: **www.bobcat.com**.

TOUGH, AGILE & SAFE

BRING PRECISION TO YOUR WAREHOUSE WITH THE BPR20/25N-7 PALLET TRUCKS

The BPR20/25N-7 Ride-on Pallet Trucks offer excellent performance, maneuverability, and durability, making them the perfect fit for busy warehouse operations.

DESIGNED FOR EASY OPERATION

With a small turning radius, one-handed operation, keyless access via PIN or RFID, and intuitive controls, our pallet trucks offer smooth and efficient handling.

COMFORTABLE HANDLING ALL SHIFT LONG

Our truck's foldable, anti-slip platforms with side protection and suspension reduce fatigue, while ergonomic tiller heads ensure comfortable grips for both right- and left-handed operators.

SAFETY-DRIVEN PERFORMANCE

The BPR20/25N-7 Pallet Trucks prioritize safety with an upgraded platform, side protection, and Electric Power Steering (EPS) for smooth handling and reduced speed in corners.

GET QUALITY THAT LASTS WITH BOBCAT

Powered by reliable components, our trucks deliver dependable performance for everyday tasks, with easy-to-use controls for smooth operation and a maintenance-free motor that ensures optimal efficiency.

EASE OF USE

ONE-HAND OPERATION
Take control with one hand—left or right! With large butterfly switches, a rounded handle, and an easy-access turtle button, the intuitive design moves with you. Plus, the ergonomic tiller head reduces strain on your hands and wrists

INSTANT ACCESS & INSIGHT
Get easy, secure access to your stacker with just a PIN or RFID card—ensuring only authorized use. Plus, the optional display gives you quick access to key information like battery life, speed, and hours, so you're always in the know and ready to go.

LOCK IN SAFETY WITH AUTOMATIC PARKING BRAKE
With the Intorq automatic electromagnetic parking brake, your pallet truck stays locked in place the moment you release the tiller. No slipping, no sliding – just safety and stability during breaks or between tasks.

TAKE CONTROL WITH EPS STEERING
Our precise and effortless Electric Power Steering (EPS) enhances control for smoother, faster operations, giving your workflow a productivity edge. It also boosts safety by adjusting motor angles, making maneuvering easier and reducing mishaps compared to traditional systems.

BUILT TO SUPPORT YOU
The platform easily unfolds when you need it, giving you a stable, anti-slip surface to stand on while you work. With built-in side protection, you'll stay secure and focused on the task at hand. Comfort, safety, and convenience—all in one!

SAFER CORNERING
Corner speed reduction slows you down during turns, keeping you steady and in control for safer operation.

MAIN SPECIFICATIONS

TECHNICAL DATA ACCORDING TO VDI 2198				
		Unit	BPR20N-7	BPR25N-7
CHARACTERISTICS				
Operator type			platform	
Load capacity / rated load center	Q	kg	2 000	2 500
Load center	c	mm	600	
Load distance	x	mm	892[1]	
Wheelbase	y	mm	1 330[1 2]	1 435[1]
TIRES				
Tires			polyurethane (PU)	
Track, front	b10	mm	560	
Tread, rear	b11	mm	367 / 512	
DIMENSIONS				
Lift height	h3	mm	120	
Height tiller, in drive position	h14	mm	980 / 1 300	
Height, lowered	h13	mm	85	
Overall length	l1	mm	1 790[2 3]	1 895
Length to face of forks	l2	mm	640[2 3]	745[3]
Overall width	b1/b2	mm	790	
Fork dimensions	s/e/l	mm	55 / 173 / 1 150	
Distance between fork arms	b5	mm	540 / 685	
Ground clearance, center of wheelbase	m2	mm	30	
Aisle width for pallets 1 000 × 1 200 crossways	Ast	mm	2 400[2 3]	2 505[3]
Aisle width for pallets 800 × 1 200 lengthways	Ast	mm	2 290[2 3]	2 395[3]
Turning radius	Wa	mm	1 585[2 3]	1 690[3]
PERFORMANCE DATA				
Travel speed, with / without load		km/h	7.5 / 8	6 / 7
Lift speed, with / without load		mm/s	250 / 300	350 / 450
Lowering speed, with / without load		mm/s	300 / 250	450 / 500
Max. gradeability, with / without load		%	15 / 10	
ENGINE				
Drive motor rating S2, 60 min		kW	1.4	
Lift motor rating at S3, 10%		kW	0.8	2.2
Battery voltage, nominal capacity K5		V/Ah	24 / 160-210	24 / 270-350
Battery weight		Kg	155	235
Energy consumption acc. to VDI cycle		kWh/h	0.55	0.95
ADDITIONAL DATA				
Type of drive control			AC speed control	
Sound level at driver's ear acc. to EN 12053		dB(A)	69	

[1] Load section lowered: +65mm
[2] With side battery removal: +30 mm
[3] With compact platform: +440 mm

Specification values in this sheet have been rounded. Performance may vary depending on operating conditions.
Products and specifications are subject to improvement and change without prior notice.

STANDARD EQUIPMENT & OPTIONS

STANDARD EQUIPMENT & OPTIONS		
	BPR20N-7	BPR25N-7
PRODUCTIVITY		
AC drive motor	✓	✓
Curtis controller	✓	✓
Display to monitor energy and machine status	✓	✓
Foldable platform	✓	✓
Electric power steering	✓	✓
Lead-acid or lithium-ion battery	✓	✓
Single or tandem load wheels	✓	✓
Built-in charger for lead-acid batteries	•	•
Battery roll in-out system	•	✓
SAFETY		
Turtle speed button	✓	✓
Speed reduction kit for cornering	✓	✓
Safety reverse button	✓	✓
Platform protection bar	✓	✓
Load backrest 1 070 mm	•	•
Load backrest 1 220 mm	•	•
Pin code with RFID access	•	•

• = option ✓ = standard – not available

*This list is based on factory data. Standard and optional features may vary by country.

STANDARD EQUIPMENT & OPTIONS	
	BPM16/20N-7
FORKS	
1 000 × 540 mm	✓
1 000 × 685 mm	✓
1 150 × 685 mm	•
1 150 × 540 mm	•
1 220 × 685 mm	•
1 220 × 540 mm	•
1 500 × 685 mm	•
1 500 × 540 mm	•
1 800 × 685 mm	✓
1 800 × 540 mm	✓
2 000 × 685 mm	•
2 000 × 540 mm	•
2 400 × 685 mm	•
2 400 × 540 mm	•

DIMENSIONS

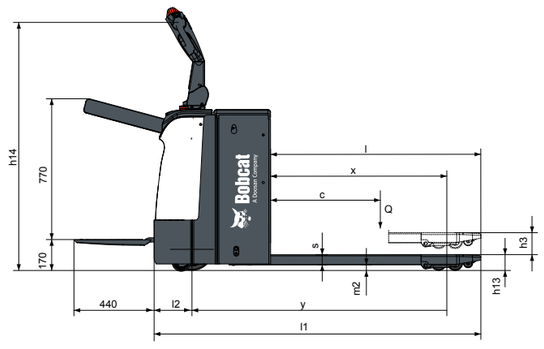

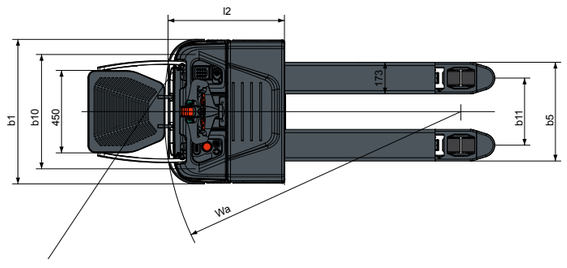

BUILT TO LAST

MADE WITH THE BEST COMPONENTS

Packed with premium European components — ZF gearbox, Schabmüller motor, Curtis controller, and REMA tiller head — as well as a durable chassis and 8 mm metal skirt, our pallet trucks deliver peak reliability and power where it counts, with an eye on optimal quality/price.

1 YEAR WARRANTY

WARRANTY

Bobcat develops every machine to the highest standards of quality and durability. That's why our standard warranty provides 12 months or 2 000 operating hours (whichever occurs first) of parts coverage.

BOBCAT GENUINE PARTS

Quality components delivered to our dealers guarantee that all of our equipment is built to last, withstand the toughest conditions, and deliver reliable performance.

EXTENSIVE DEALER NETWORK

You can rely on our network of dealers and service partners who are always ready to help you.

Li-Ion TECHNOLOGY

Europe MEA CIS

SEE IF IT'S THE RIGHT FIT FOR YOUR FLEET

LI-ION BATTERY WARRANTY

With a 60-month / 10 000 operating hours (whichever occurs first) warranty, Bobcat's lithium-ion battery ensures reliable performance and peace of mind for years.

Bobcat

Doosan Bobcat EMEA, U Kodetky 1810, 263 12 Dobříš, Czech Republic

DOOSAN

Bobcat is a Doosan Company. Doosan is a global leader in construction equipment, power & water solutions, engines, and engineering proudly serving customers and communities for more than a century. | Bobcat and the Bobcat logo are registered trademarks of Bobcat Company in the United States and various other countries. ©2025 Bobcat Company. All Rights Reserved.

www.bobcat.com

©2025 BOBCAT L4503372-EN (11-25)