Bobcat

One Tough Animal

POWERED STACKERS

Warehouse equipment, 1.2 to 1.6-ton capacity, Riders

EMEA

A SMART, VALUE-DRIVEN CHOICE FOR EVERYDAY WAREHOUSE TASKS

The BSR12/16N-7(i) Ride-on Stackers, with a 1.2 to 1.6-ton capacity, strike the perfect balance between durability, performance, and value. These stackers are highly maneuverable in tight spaces, with a compact overall length of 1 896 mm and a tight turning radius of 1 420 mm. Plus, thanks to the optional Li-Ion battery, you'll enjoy longer run times, quicker charging, and greater sustainability, making them a perfect fit for your busy warehouse routine.

At Bobcat, we understand the importance of having the right products and services. For more information, contact your local dealer or visit: **www.bobcat.com**.

TOUGH, AGILE & SAFE

LIFT, STACK, REPEAT: BSR12/16N-7(i) FOR CONSISTENT PERFORMANCE

Designed with durable components, the BSR12/16N-7(i) Stackers deliver reliable performance and exceptional value, making them ideal for daily stacking tasks. Optional features like the Initial Lift handle gradients and bumps effortlessly, while tandem load wheels provide smooth, quiet operation. Add a load backrest for extra protection and enjoy the productivity of a long-lasting lithium-ion battery, made to meet the demands of your workday.

Electronically controlled proportional lifting system for precise positioning and stacking at any height

Reliable and strong chassis for maximum durability

Curtis controller for quick diagnostics and reduced maintenance

Optional lithium-ion battery for low maintenance and energy efficiency

Li-Ion TECHNOLOGY

Upgraded foldable platform with anti-slip surface and side protection

Load backrest to create a barrier between the load and chassis

Intorq electromagnetic parking brake for increased safety and stability

Suspension system on the operator platform for a smoother ride and reduced strain

Contoured fork design and tandem load wheels for easy entry and exit of palletized loads

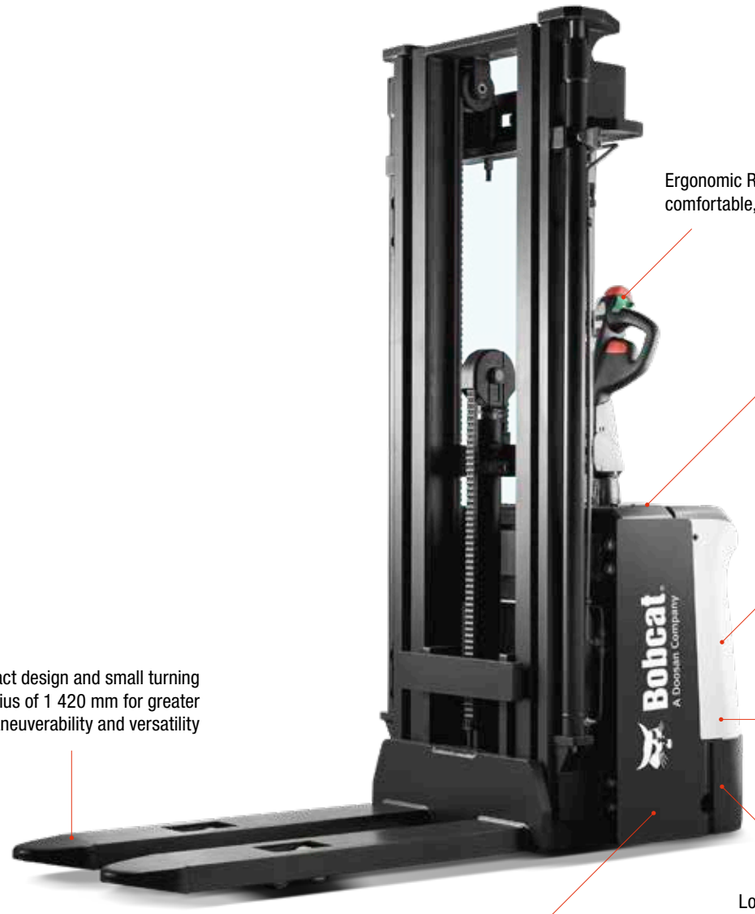

Ergonomic REMA tiller head to ensure comfortable, secure operation all day

Multi-function display with PIN code and RFID features to prevent unauthorized use

Optional built-in charger for lead-acid battery

Compact design and small turning radius of 1 420 mm for greater maneuverability and versatility

Electric Power Steering (EPS) to adjust motor speed for smoother, faster operations

Low chassis skirt to shield operator's feet from the load

Powerful, maintenance-free Schabmüller AC lift motor for rapid and efficient lifts

SMARTER & SMOOTHER

The BSR12/16N-7(i) Stackers offer one-hand operation, automatic parking brake, and secure access. Their design ensures excellent maneuverability, while proportional lift control provides precise lifting.

COMFORT THAT KEEPS YOU GOING

Our stackers feature foldable platforms with anti-slip surfaces, side protections, and suspension systems for a smooth ride, while the ergonomic tiller heads offer comfortable grips.

SAFETY BUILT IN

With speed corner reduction, smooth steering, extra protection from the low chassis skirt, and an electric power steering system, you can stack confidently—knowing safety is built in!

KEEP YOUR WAREHOUSE UP AND RUNNING

Powered by reliable components, with easy-to-use controls, and a maintenance-free motor that ensures optimal efficiency, our trucks are built to handle the demands of your warehouse.

EASE OF USE

ONE-HAND OPERATION
Take control with one hand—left or right! The large rocker buttons, rounded drawbar handle, and big approach button are intuitively designed for smooth movement. Plus, the ergonomic tiller head provides excellent grip, ensuring all-day comfort for your hands and wrists.

INSTANT ACCESS & INSIGHT
Get easy, secure access to your stacker with just a PIN or RFID card—ensuring only authorized use. Plus, the optional display gives you quick access to key information like battery life, speed, and hours, so you're always in the know and ready to go.

LOCK IN SAFETY WITH AUTOMATIC PARKING
With the Intorq automatic electromagnetic parking brake, your stacker stays locked in place the moment you release the tiller. No slipping, no sliding – just safety and stability during breaks or between tasks.

BETTER BALANCE, BETTER RESULTS
Speed Corner Reduction helps you stay steady and in control by slowing you down during turns for safer operation. Plus, the Initial Lift feature raises the support legs up to 120 mm, making it easier to move your stacker over thresholds, bumps, and uneven floors.

TAKE CONTROL WITH EPS STEERING
Our precise and effortless Electric Power Steering (EPS) enhances control for smoother, faster operations, giving your workflow a productivity edge. It also boosts safety by adjusting motor angles, making maneuvering easier and reducing mishaps compared to traditional systems.

MORE PRECISE HANDLING
The proportional lift control on the BSR12/16N-7(i) Stacker gives you precise lifting and lowering, reducing the risk of damage and accidents. Whether you're handling delicate or heavy loads, you get better control, smoother operation, and safer, more efficient lifting.

MAIN SPECIFICATIONS

TECHNICAL DATA ACCORDING TO VDI 2198					
		Unit	BSR12N-7	BSR16N-7	BSR16N-7i
CHARACTERISTICS					
Operator type			pedestrian		
Load capacity / rated load center	Q	kg	1 200	1 600	
Load center	c	mm	600		
Load distance	x	mm	647		767 [1]
Wheelbase	y	mm	1 167	1 215	1 480 [1]
TIRES					
Tires			polyurethane (PU)		
Track, front	b10	mm	510		519
DIMENSIONS					
Lift height	h3	mm	3 510	5 410	4 530
Tiller height, drive position	h14	mm	950 / 1 350		
Height, lowered	h13	mm	90		
Overall length	l1	mm	1 855 [1]	1 896 [1]	2 044 [2]
Length to face of forks	l2	mm	705 [1]	746 [1]	894 [2]
Overall width	b1/b2	mm	790		
Fork dimensions	s/e/l	mm	60 / 180 / 1 150		
Distance between fork arms	b5	mm	570 / 685		
Ground clearance, center of wheelbase	m2	mm	28		20
Aisle width for pallets 1 000 × 1 200 crossways	Ast	mm	2 285 [1]	2 325 [1]	2 586 [3]
Aisle width for pallets 800 × 1 200 lengthways	Ast	mm	2 250 [1]	2 290 [1]	2 566 [3]
Turning radius	Wa	mm	1 380 [1]	1 420 [1]	1 700 [3]
PERFORMANCE DATA					
Travel speed, with / without load		km/h	7 / 8	6 / 7	
Lift speed, with / without load		mm/s	90 / 140	130 / 200	90 / 140
Lowering speed, with / without load		mm/s	250 / 200	280 / 230	250 / 200
Max. gradeability, with / without load		%	6 / 12		
ENGINE					
Drive motor rating S2, 60 min		kW	1.4		
Lift motor rating at S3, 10%		kW	1.5	3.2	
Battery acc. to DIN 43531/35/36 A, B, C, no			2PZB	3VBS	
Battery voltage, nominal capacity K5		V/Ah	24 / 160-180	24 / 210-270	24 / 270
Battery weight		Kg	155	185	230
Energy consumption acc. to VDI cycle		kWh/h	0.95	1.34	0.73
ADDITIONAL DATA					
Type of drive control			AC speed control		
Sound level at driver's ear acc. to EN 12053		dB(A)	<70		

Specification values in this sheet have been rounded. Performance may vary depending on operating conditions.
Products and specifications are subject to improvement and change without prior notice.
Mast dimensions refer to a range from the lowest to the highest available mast.

[1] With compact platform: +440 mm
[2] When platform is folded: -74 mm
[3] When platform is extended: +440 mm

STANDARD EQUIPMENT & OPTIONS

STANDARD EQUIPMENT & OPTIONS		
	BSR12N-7	BSR16N-7(i)
PRODUCTIVITY		
AC drive motor	✓	✓
Curtis controller	✓	✓
Foldable platform	✓	✓
Proportional lifting and lowering	✓	✓
Tandem load wheels	✓	✓
Lead-acid or lithium-ion battery	✓	✓
Initial lift	–	•
SAFETY		
Turtle speed button	✓	✓
Speed reduction kit for cornering	✓	✓
Safety reverse button	✓	✓
Platform protection bar	✓	✓
Pin code with RFID access	•	•
Load backrest 1 070 mm	•	•
Load backrest 1 220 mm	•	•

STANDARD EQUIPMENT & OPTIONS		
	BSR12N-7	BSR16N-7(i)
FORKS		
1 150 / 570 mm	✓	✓
1 150 / 685 mm	•	•
MASTS		
Standard (STD), 2 900 mm	✓	✓
Standard (STD), 3 200 mm	•	•
Standard (STD), 3 600 mm	•	•
Full free (FF), 2 900 mm	•	–
Full free (FF), 3 200 mm	•	•
Full free (FF), 3 600 mm	•	•
Full free triple (FFT), 4 000 mm	–	•
Full free triple (FFT), 4 300 mm	–	•
Full free triple (FFT), 4 600 mm	–	•
Full free triple (FFT), 5 300 mm	–	• [1]
Full free triple (FFT), 5 500 mm	–	• [1]

• = option ✓ = standard – not available

[1] only for BSR16N-7
*This list is based on factory data. Standard and optional features may vary by country.

DIMENSIONS

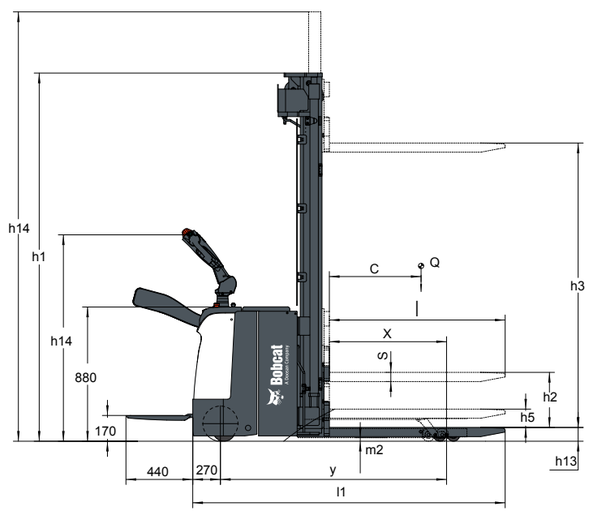

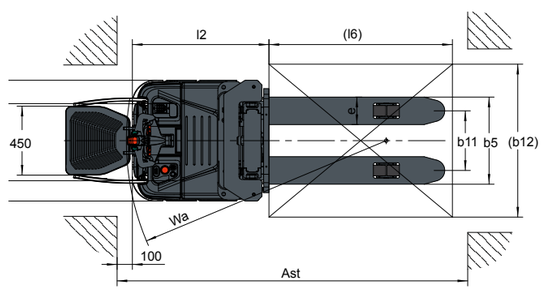

BUILT TO LAST

TOUGH INSIDE AND OUT

Built for the demands of your warehouse, our stackers feature a durable chassis, 8 mm metal skirt for extra protection, and top-tier components like a ZF gearbox, Schabmüller drive motor, Curtis controller, and REMA tiller head for peak performance and reliability.

1 YEAR WARRANTY

WARRANTY

Bobcat develops every machine to the highest standards of quality and durability. That's why our standard warranty provides 12 months or 2 000 operating hours (whichever occurs first) of parts coverage.

BOBCAT GENUINE PARTS

Quality components delivered to our dealers guarantee that all of our equipment is built to last, withstand the toughest conditions, and deliver reliable performance.

EXTENSIVE DEALER NETWORK

You can rely on our network of dealers and service partners who are always ready to help you.

Li-Ion TECHNOLOGY

Europe MEA CIS

SEE IF IT'S THE RIGHT FIT FOR YOUR FLEET

LI-ION BATTERY WARRANTY

With a 60-month / 10 000 operating hours (whichever occurs first) warranty, Bobcat's lithium-ion battery ensures reliable performance and peace of mind for years.

Bobcat

Doosan Bobcat EMEA, U Kodetky 1810, 263 12 Dobříš, Czech Republic

DOOSAN

Bobcat is a Doosan Company. Doosan is a global leader in construction equipment, power & water solutions, engines, and engineering proudly serving customers and communities for more than a century. | Bobcat and the Bobcat logo are registered trademarks of Bobcat Company in the United States and various other countries. ©2025 Bobcat Company. All Rights Reserved.

www.bobcat.com

©2025 BOBCAT L4503382-EN (12-25)